EDR torches®
Evolution Design Robotics

COBOTIC

WELDING TORCHES

HIGH-PERFORMANCE

CATALOG

"We understand that the development of a product starts at the design stage but just as important are quality and production"

Companies with technological or industrial character know the importance of innova-ting to continue in the current market. In EDR torches this becomes a work philosophy, we understand that without innovation it is not possible to advance in such a competitive world where companies and professionals need increasingly com-plex solutions.

EDR torches has a strong R & D department dedicated to the deve-lopment of new welding applications, providing customized solutions both in the area of robotic welding and manual.

We understand that the development of a product begins at the design stage but just as important are the quality and production designed and tested.

The long experience of EDR torches in all sectors related to welding makes us capable of providing the best solutions to your manufactu-ring challenges, tell us what you need and we will make it possible.

COBOTIC
WELDING TORCHES

"EDRtorches is the result of a long engineering work de-veloping products for robotic welding system"

When we gather in a company more than 25 years of experience in designing applica-tions and solutions in welding, with a high level engineering team only something good can arise, EDRtorches is the result of a long engineering work developing products for wel-ding systems robotic, automated and manual.

Our spirit of continuous innovation is evident in the entire product line we manufacture, we believe that we must see beyond what the industry needs and anticipate solutions to future challenges.

With the product ranges endorsed by companies worldwide, we ensure the most appropriate solution to your demand, in addition to a high level of advice.

EDRtorches we have the solution and the product you need.

INDEX

COBOT systems 6 Pag.

Selection guides COBOT installations

Installation codes MIG-MAG COBOT 12 Pag.

Installation codes MIG-MAG BASIC 14 Pag.

Installation codes TIG COBOT-T5W 16 Pag.

1 2 3 4 **Robotic welding torches**

MIG / MAG COBOT-30G (300A) 18 Pag.

MIG / MAG COBOT-40W (500A) 20 Pag.

MIG / MAG BASIC-42G (300A) 22 Pag.

MIG / MAG BASIC-45G (400A) 24 Pag.

MIG / MAG BASIC-52W (500A) 26 Pag.

TIG COBOT-T5W (400A) 28 Pag.

6 **Cleaning station CS2** 30 Pag.

7 **Control disc for UR** 32 Pag.

8 **Cover cobot for UR** 34 Pag.

Data base 38 Pag.

COBOT

Robotic welding torches for HD

BASIC

Robotic welding torches MEDIUM CYCLES

COBOT TIG

Robotic welding torches for Cobots TIG

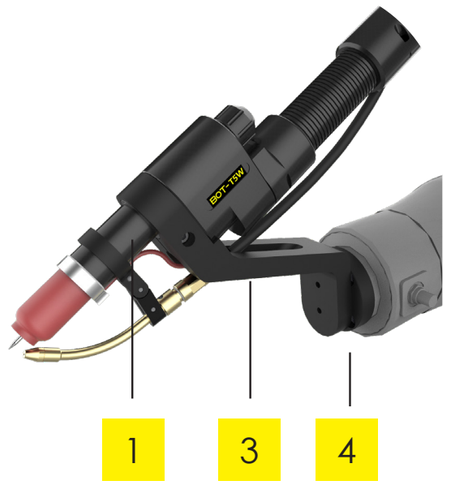

COBOT

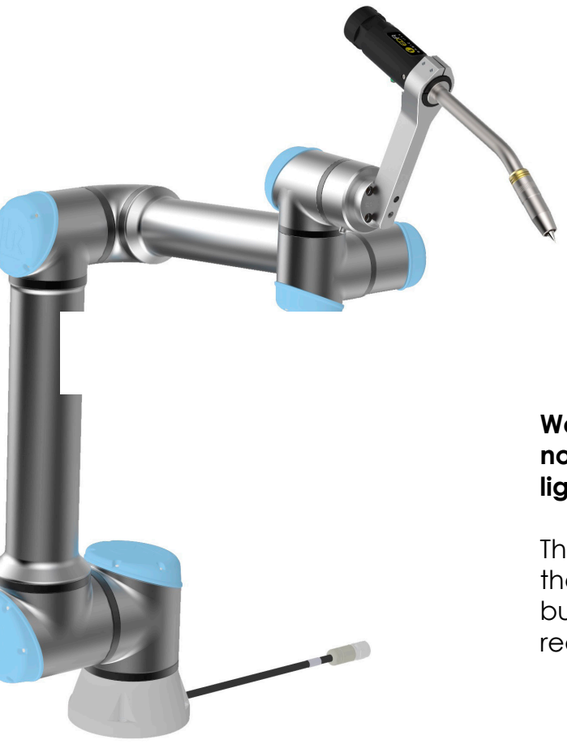

Welding torches designed for collaborative robots do not need anti-collision systems, which makes them lighter and easier to set up.

They can be used with control elements to facilitate the programming of the robot with the position 4 disc, but this is not necessary if your application does not require it.

Range of torches designed welding solutions with collaborative robots. This line of CO-BOT series torches adapts perfectly to all the requirements of collaborative robots due to its low weight and functionality.

Robust and light necks calibrated to maintain a stable TCP during the life of the torch, in addition to stainless steel structure that gives an excellent rigidity and avoids the increase of the temperature in the back areas of the neck, being able to be handled with greater ease, but always maintaining the precautions that a welding process requires.

1 Welding necks MIG-MAG

Structure of the neck in stainless steel, gives a rigidity and stability of the TCP much higher than the termination in Brass more unstable with changes in temperature.

Interchangeable necks. Total compatibility and wide range of torch. Threaded neck change system, quick and easy with independent circuits and automatic liquid shutoff valves.

Double Cooling

Separate ducts for the entire BOT line. Double circuit cooling system for nozzle and contact tip completely Independent. Gas driving totally separates from the rest of circuits like the thread of contribution, improving the stability of the gas outlet and the projection.

8-hole diffusers. The distribution of the 8 holes of the diffuser generates a better distribution of the shielding gas and a better cooling of the nozzle.

COLDTip

Necks 40W with cooling system. Long duration tip system COLDTip, exclusive of the BOT torch line, with this system the use of standard system contact tips is reduced from 3 to 5 times. How is it achieved. The system maintains the tip of contact at low temperature which makes the hardness of copper is not affected and wear less with the passage of the thread, in addition to stay cold the projections do not stick. Half of the contact tip enters a cooling chamber, The cone of the tip gives electrical and thermal transmission efficiency.

Welding necks TIG

The TIG welding system for BOT systems can be used with or without thread supply, it is liquid cooled and its cooling power allows high working cycles maintaining the stability of tungsten.

More arch stability.
Integrated metal ring improves HF stability.

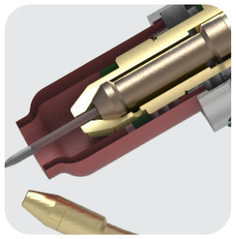

Longer lifeline.
Tungsten holders of large dimensions and high durability.

Protection options.
Connector for anti-collision system (not for cobots)

Better cooling.
Powerful cooling circuit up to the diffuser

Fume extraction

ASMIG

The ASMIG system guarantees the maximum extraction of welding fumes in BOT systems, being this system modular and can be incorporated as an accessory in an already operating installation.

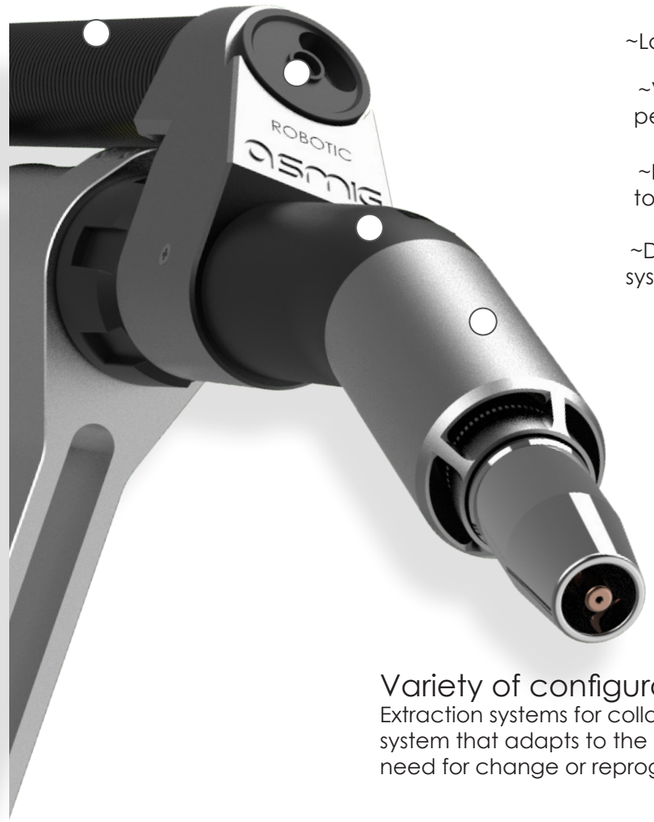

~Large Diameter Pipe With Lower Suction Losses

~Vacuum Regulation System External To The Pump. Independent Adjustment Of Each Torch In Centralized Systems

~Independent elbow. allow the systems to be adapted to different types of standard necks of the bot series

~Different sizes and lengths of suction nozzles. adjust your system to the best conditions

PATENT PENDING

Variety of configurations without losing programming.
Extraction systems for collaborative and industrial robots, ASMIG is a modular system that adapts to the torch that you currently have installed without the need for change or reprogramming in BOT series systems

MORE INFORMATION CONSULT THE ASMIG SUCTION CATALOG

6

Cleaning station CS2

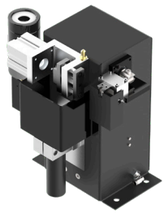

Nozzle cleaning station for automated and robotized welding torches. It incorporates welding wire cutting unit. Guarantees continuity of the welding process, keeping the nozzle of the welding torch free of slag and projections

7

Control disc for UR

Control and programming disc with buttons directly on the wrist of the robot. designed with welding programming software for universal robots.

8

Cover robot UR

Welding protection cover, designed for various models of universal robots.

S1 — S2 — 1 — 2 — 3 — 4

COBOT

GAS COOLING

COBOT-30G 300A e-BOT

3000	R12.0000	BOT-30G-180°
3022	R12.0220	BOT-30G-22°
3045	R12.0450	BOT-30G-45°

EEXXXG	R91.1XXX	power cable	gas Euro
EMXXXG	R91.2XXX	power cable	gas Miller
EPXXXG	R91.3XXX	power cable	gas Panasonic
EOXXXG	R91.4XXX	power cable	gas OTC

T1	R10.0011	L76xD15.5
T2	R10.0012	L76xD13
T3	R10.0211	L79xD15.5

BICOMP

P10	R10.0400.10	M10 1.0
P12	R10.0400.12	M10 1.2

67	R41.1023	Bracket 67°

5040	R75.0020	D50x4

LIQUID COOLING

BOT-40W 500A e-BOT

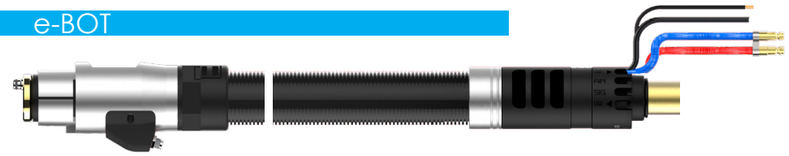

4000	R14.0000	BOT-40W-180°
4022	R14.0220	BOT-40W-22°
402F	R14.0222	BOT-40W-22°F
402L	R14.0221	BOT-40W-22°L
40LF	R14.0223	BOT-40W-22°LF
4036	R14.0360	BOT-40W-36°
4045	R14.0450	BOT-40W-45°
404L	R14.04511	BOT-40W-45°L

EEXXXL	R92.1XXX	power cable	liquid Euro
EMXXXL	R92.2XXX	power cable	liquid Miller
EPXXXL	R92.3XXX	power cable	liquid Panasonic
EOXXXL	R92.4XXX	power cable	liquid OTC

K1	R04.0000	Neck tool BOT

S1 + S2 + 1 + 2 + 3 + 4 +

Sample installation code: T1-P12-3022-IE137G-XX-IB-5860-K1

1 — 3 — 4

GAS COOLING

BASIC-42G 300A

BE3G22	R98 1400 22	Welding torch 42G-22° gas BASIC 4mts-Euro-V2
BE3G45	R98 1400 45	Welding torch 42G-45° gas BASIC 4mts-Euro-V2
BM3G22	R98 2400 22	Welding torch 42G-22° gas BASIC 4mts-Miller-V2
BM3G45	R98 2400 45	Welding torch 42G-45° gas BASIC 4mts-Miller-V2
BP3G22	R98 3400 22	Welding torch 42G-22° gas BASIC 4mts-Panasonic-V2
BP3G45	R98 3400 45	Welding torch 42G-45° gas eBASIC 4mts-Panasonic-V2

GAS COOLING

BASIC-45G 400A

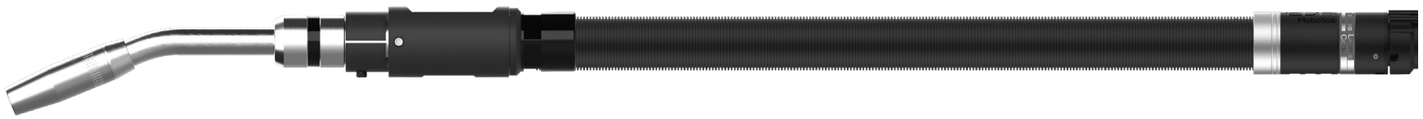

BE4G22	R96 1400 22	Welding torch 45G-22° gas BASIC 4mts-Euro type
BE4G45	R96 1400 45	Welding torch 45G-45° gas BASIC 4mts-Euro type
BM4G22	R96 2400 22	Welding torch 45G-22° gas BASIC 4mts-Miller type
BM4G45	R96 2400 45	Welding torch 45G-45° gas BASIC 4mts-Miller type
BP4G22	R96 3400 22	Welding torch 45G-22° gas BASIC 4mts-Panasonic type
BP4G45	R96 3400 45	Welding torch 45G-45° gas eBASIC 4mts-Panasonic type

67	R41.1023	Bracket 67°
5040	R75.0020	D50x4

LIQUID COOLING

BASIC-52W 500A

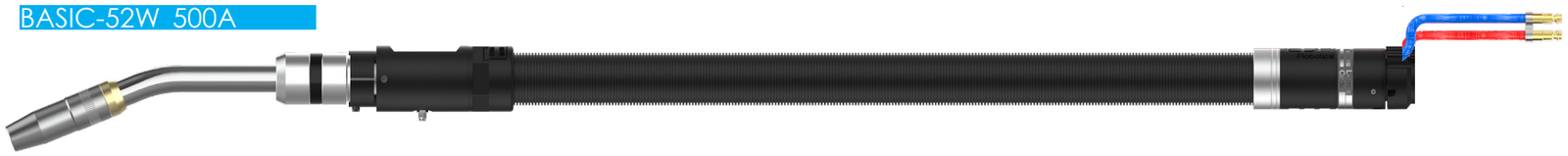

BE4W22	R99 1400 22	Welding torch 52W-22° gas eBASIC 4mts-Euro-V2
BE4W45	R99 1400 45	Welding torch 52W-45° gas eBASIC 4mts-Euro-V2

1 + 3 + 4

Sample installation code: BE3W22-67-5040

S1 — S2 — 1 — 3 — 4

COBOT

LIQUID COOLING

COBOT-T5W 400A

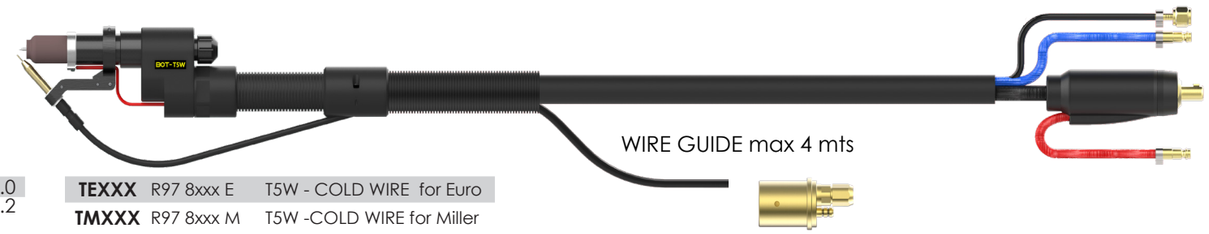

P10	R15 0110	M6 1.0
P12	R15 0112	M6 1.2

TEXXX	R97 8xxx E	T5W - COLD WIRE for Euro
TMXXX	R97 8xxx M	T5W -COLD WIRE for Miller

T D H

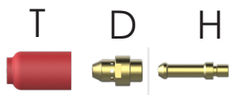

T1	T54N16	Nozzle G6
T2	T54N15	Nozzle G7
T3	T54N14	Nozzle G8
D1	R15 5304	Diffuser M14 2.4mm
D2	R15 5305	Diffuser M14 3.2mm
H1	R15 5524	E. holder 2.4 mm
H2	R15 5532	E. holder 3.2 mm

30 R41.5001 Bracket 30°

5040 R75.0021 D45x4

LIQUID COOLING

COBOT-T5W 400A

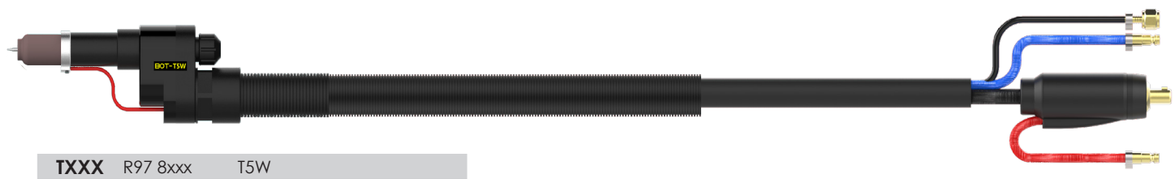

TXXX R97 8xxx T5W

S1 + S2 + 1 + 3 + 4

Sample installation code: T1-D1-H1-P12-TE400-30-5040

Torch neck COBOT-30G

MIG/MAG, GMAW,131,135
IEC60974-7

High resistance materials

Gas

- 300 A - CO2 100%
- 250A - Mix M21 100%
- Ø 1.0-1.2 mm
- 10-16 l/min
- The capacity will be reduced by 35% whit pulsed arc.

Manufacturing characteristics.
~Use in most applications
~8-hole diffuser, better gas flow
~High thermal resistance materials
~High stability of TCP
~Stainless steel construction
~Medium working intensity

Applications
~Non-alloy and low alloy steels
~High alloy steels.

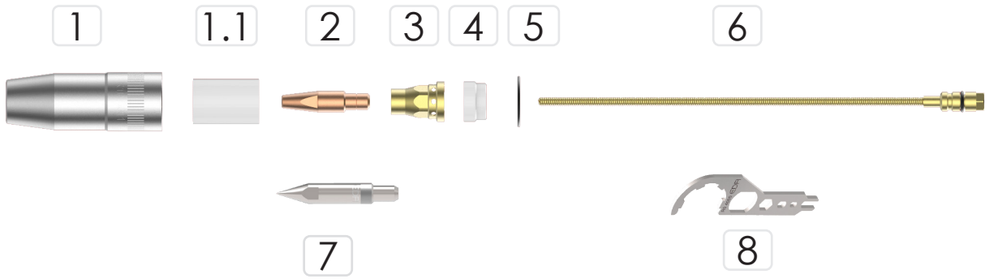

Pos.	CODE	TYPE	Min. Q.
1	R10 0011	Nozzle L76xØ15.5 mm	2
	R10 0012	Nozzle L76xØ13 mm	2
	R10 00211	Nozzle L79xØ15.5 mm	2
1.1	R10 0002	Insulator nozzle L32XØ20.75 mm	2
2	R10 0400 10	Contact tip M10 1.0 mm Cu-BICOMP	5
	R10 0400 12	Contact tip M10 1.2 mm Cu-BICOMP	5
	R10 0400 16	Contact tip M10 1.6 mm Cu-BICOMP	5
	R10 0401 08	Contact tip M10 0.8 mm CuCrZr	10
	R10 0401 10	Contact tip M10 1.0 mm CuCrZr	10
	R10 0401 12	Contact tip M10 1.2 mm CuCrZr	10
	R10 0401 16	Contact tip M10 1.6 mm CuCrZr	10
3	R12 0013	Diffuser L26xØ18.5 mm M10	2
4	R12 0308	Insulator neck L11XØ18.5 mm	2
5	R10 0401	Oring neck Ø23 mm	10
6	R10 1112	Liner for neck type N 217mm	1
7	R10 0115	Tip TCP M10-15mm programming	1
8	R04 0000	Neck tool BOT	1

A BOT-30G 22° N

B BOT-30G 45° N

Pos.	CODE	TYPE	Min. Q.
A	R12 0220	Torch neck BOT-30G 22° (X=64 mm, Z=247 mm)-long type N	1
B	R12 0450	Torch neck BOT-30G 45° (X=111 mm, Z=217 mm)-long type N	1

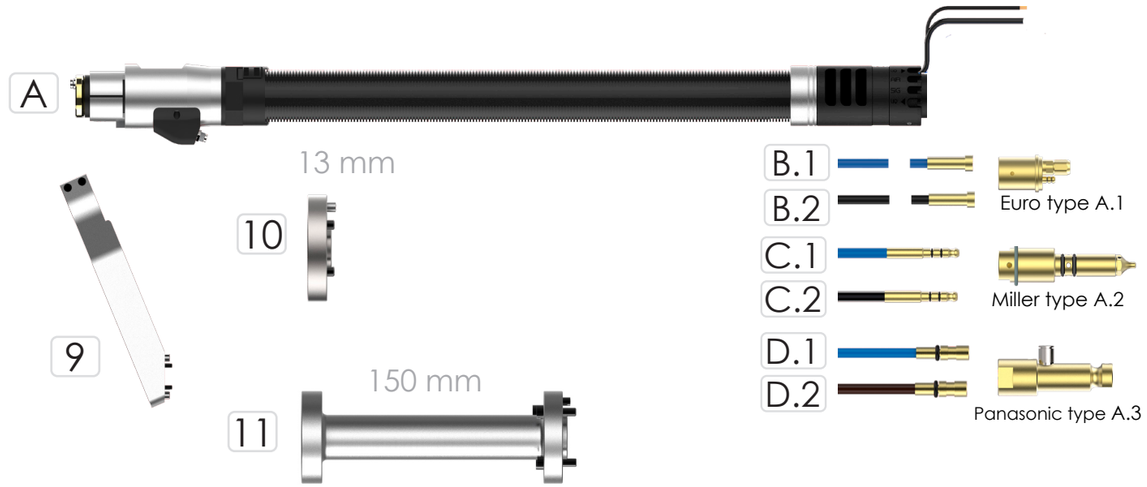

Pos.	CODE	TYPE	Min. Q.
A.1	R91 1300	Power cable gas eBOT-Euro type- 3mts	1
	R91 1400	Power cable gas eBOT-Euro type-4mts	1
A.2	R91 2300	Power cable gas eBOT-Miller type- 3mts	1
	R91 2400	Power cable gas eBOT-Miller type-4mts	1
A.3	R91 3300	Power cable gas eBOT-Panasonic type- 3mts	1
	R91 3400	Power cable gas eBOT-Panasonic type-4mts	1
1.1	M99 4104	Guide blue BOT L4600xD4.6xD1.5mm(0.8-1.0)-Euro	1
	M99 4004	Guide black BOT L4600xD4.6xD1.5mm(1.2-1.6)-Euro	1
1.2	M99 1004	Guide blue BOT L4600xD4.6xD1.5mm(0.8-1.0)-Miller	1
	M99 1104	Guide black BOT L4600xD5.3xD2.2mm(1.2-1.6)-Miller	1
1.3	M99 1304	Guide blue BOT L4600xD4.6xD1.5mm(0.8-1.0)-Panasonic	1
	M99 1204	Guide black BOT L4600xD5.3xD2.2mm(1.2-1.6)-Panasonic	1
9	R41 1023	Torch bracket eBOT 67°	1
10	R75 0020	Direct adapater disc eBOT D50	1
11	R75 0030	Direct adapater disc eBOT D50- Long.150mm	1

For more data and options see the BOT series catalog

1

Torch neck COBOT-40W

MIG/MAG, GMAW,131,135
IEC60974-7

COLDTip Double Cooling

Liquid

- 500 A - CO2 100%
- 400A - Mix M21 100%
- Ø 1.0-1.6 mm
- 10-18 l/min
- The capacity will be reduced by 35% whit pulsed arc.

Manufacturing characteristics.
~Use for most applications
~8-hole diffuser, better gas flow
~Separate gas, no leaks
~Double cooling circuit
~Stainless steel construction
~Hard working intensity

Applications
~Non-alloy and low alloy steels
~High alloy steels
~Aluminium, magnesium, copper and Nichel alloys

Pos.	CODE	TYPE	Min. Q.
1	R10 0011	Nozzle L76xØ15.5 mm	2
	R10 0012	Nozzle L76xØ13 mm	2
	R10 0211	Nozzle L79xØ15.5 mm	2
2	R10 0002	Insulator nozzle L32XØ20.75 mm	2
3	R10 0400 10	Contact tip M10 1.0 mm Cu-BICOMP	5
	R10 0400 12	Contact tip M10 1.2 mm Cu-BICOMP	5
	R10 0400 16	Contact tip M10 1.6 mm Cu-BICOMP	5
	R10 0400 12A	Contact tip M10 1.2 mm Cu-BICOMP Alum	5
	R10 0400 16A	Contact tip M10 1.6 mm Cu-BICOMP Alum	5
	R10 0401 08	Contact tip M10 0.8 mm CuCrZr	10
	R10 0401 10	Contact tip M10 1.0 mm CuCrZr	10
	R10 0401 12	Contact tip M10 1.2 mm CuCrZr	10
	R10 0401 16	Contact tip M10 1.6 mm CuCrZr	10
4	R10 0013	Tip holder L22xØ15 mm M10	2
5	R12 0404	Diffuser Insulator neck L14XØ18.5 mm	2
6	R10 0401	Oring neck Ø23 mm	10
7	R10 1112	Liner for neck type N 217mm	1
8	R12 0008	Oring neck water Ø9 mm	10
9	R10 0115	Tip TCP M10-15mm programming	1
10	R04 0000	Neck tool BOT	1

1 2 3 4

A BOT-40W 22° N

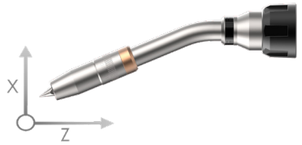

B BOT-40W 22°F N

C BOT-40W 45° N

Pos.	CODE	TYPE	Min. Q.
A	R14 0220	Torch neck BOT-40W 22° (X=64 mm, Z=247 mm)-long type N	1
B	R14 0222	Torch neck BOT-40W 22°F (X=50 mm, Z=250 mm)-long type N	1
C	R14 0450	Torch neck BOT-40W 45° (X=111 mm, Z=217 mm)-long type N	1

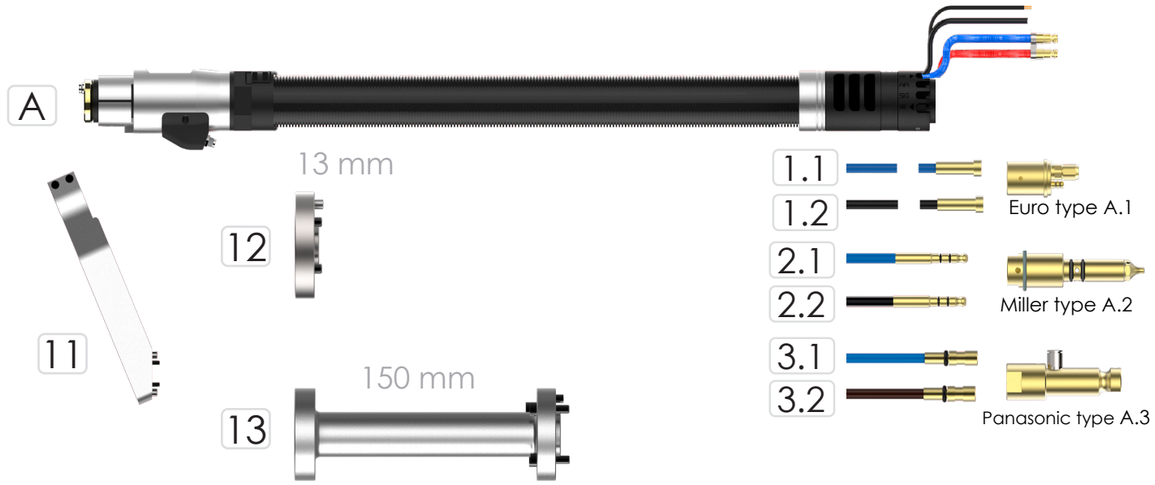

Pos.	CODE	TYPE	Min. Q.
A.1	R92 1300	Power cable liquid eBOT-Euro type- 3mts	1
	R92 1400	Power cable liquid eBOT-Euro type-4mts	1
A.2	R92 2300	Power cable liquid eBOT-Miller type- 3mts	1
	R92 2400	Power cable liquid eBOT-Miller type-4mts	1
A.3	R92 3300	Power cable liquid eBOT-Panasonic type- 3mts	1
	R92 3400	Power cable liquid eBOT-Panasonic type-4mts	1
1.1	M99 4104	Guide blue BOT L4600xD4.6xD1.5mm(0.8-1.0)-Euro	1
1.2	M99 4004	Guide black BOT L4600xD4.6xD1.5mm(1.2-1.6)-Euro	1
2.1	M99 1004	Guide blue BOT L4600xD4.6xD1.5mm(0.8-1.0)-Miller	1
2.2	M99 1104	Guide black BOT L4600xD5.3xD2.2mm(1.2-1.6)-Miller	1
3.1	M99 1304	Guide blue BOT L4600xD4.6xD1.5mm(0.8-1.0)-Panasonic	1
3.2	M99 1204	Guide black BOT L4600xD5.3xD2.2mm(1.2-1.6)-Panasonic	1
11	R41 1023	Torch bracket eBOT 67°	1
12	R75 0020	Direct adapater disc eBOT D50	1
13	R75 0030	Direct adapater disc eBOT D50- Long.150mm	1

For more data and options see the BOT series catalog

Torch neck BASIC-42G

MIG/MAG, GMAW,131,135
IEC60974-7

High resistance materials

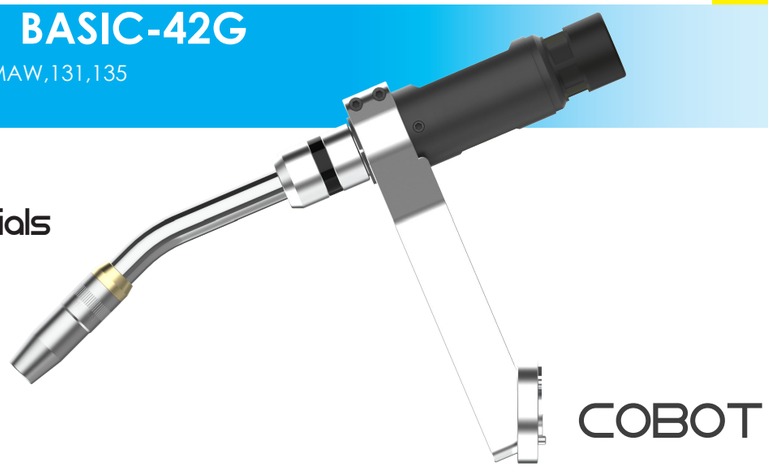

Gas

- 300 A - CO2 100%
- 250A - Mix M21 100%
- Ø 1.0-1.2 mm
- 10-16 l/min
- The capacity will be reduced by 35% whit pulsed arc.

Manufacturing characteristics.
~Low weight for COBOT
~Use in most applications
~8-hole diffuser, better gas flow
~High thermal resistance materials
~High stability of TCP
~Medium working intensity

Applications
~Non-alloy and low alloy steels
~High alloy steels.

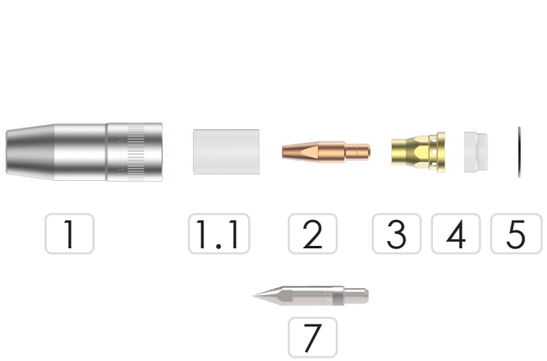

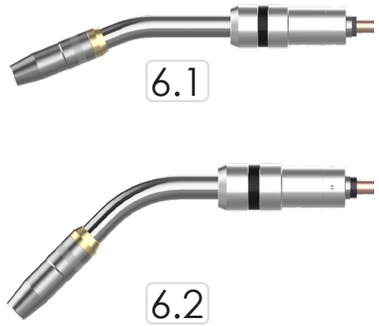

Pos.	CODE	TYPE	Min. Q.
1	R10 0011	Nozzle L76xØ15.5 mm	2
	R10 0012	Nozzle L76xØ13 mm	2
	R10 00211	Nozzle L79xØ15.5 mm	2
1.1	R10 0002	Insulator nozzle L32XØ20.75 mm	2
2	R10 0400 10	Contact tip M10 1.0 mm Cu-BICOMP	5
	R10 0400 12	Contact tip M10 1.2 mm Cu-BICOMP	5
	R10 0401 08	Contact tip M10 0.8 mm CuCrZr	10
	R10 0401 10	Contact tip M10 1.0 mm CuCrZr	10
	R10 0401 12	Contact tip M10 1.2 mm CuCrZr	10
3	R12 0013	Diffuser L26xØ18.5 mm M10	2
4	R12 0308	Insulator neck L11XØ18.5 mm	2
5	R10 0401	Oring neck Ø23 mm	10
6.1	R11 4220	Torch neck BASIC-42G 22º (X=50 mm, Z=263 mm)	1
6.2	R11 4450	Torch neck BASIC-42G 45º (X=111 mm, Z=227 mm)	1
7	R10 0115	Tip TCP M10-15mm programming	1

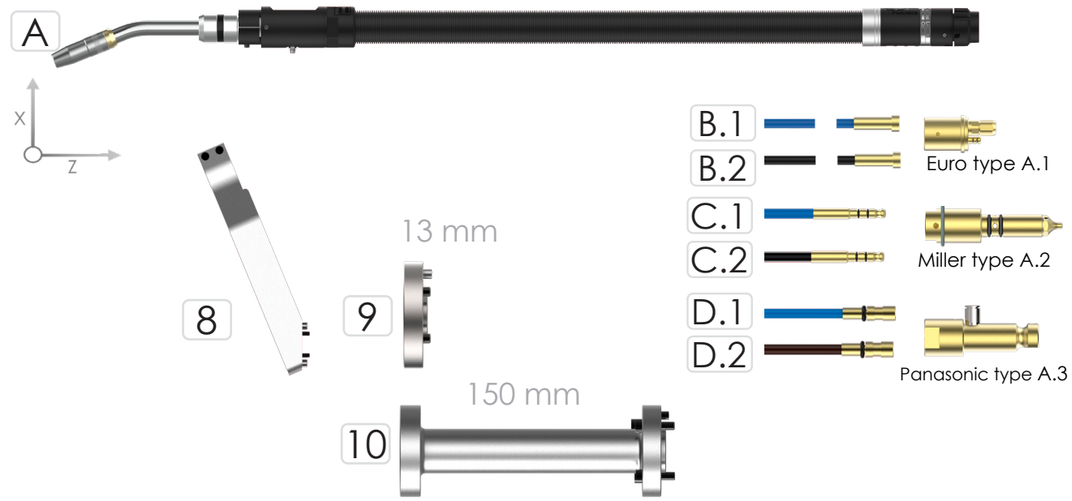

Pos.	CODE	TYPE	Min. Q.
A.1	R98 1300 22	Welding torch 42G-22º gas eBASIC 3mts-Euro-V2	1
	R98 1400 22	Welding torch 42G-22º gas eBASIC 4mts-Euro-V2	1
	R98 1300 45	Welding torch 42G-45º gas eBASIC 3mts-Euro-V2	1
	R98 1400 45	Welding torch 42G-45º gas eBASIC 4mts-Euro-V2	1
A.2	R98 2300 22	Welding torch 42G-22º gas eBASIC 3mts-Miller-V2	1
	R98 2400 22	Welding torch 42G-22º gas eBASIC 4mts-Mille-V2	1
	R98 2300 45	Welding torch 42G-45º gas eBASIC 3mts-Miller-V2	1
	R98 2400 45	Welding torch 42G-45º gas eBASIC 4mts-Miller-V2	1
A.3	R98 3300 22	Welding torch 42G-22º gas eBASIC 3mts-Panasonic-V2	1
	R98 3400 22	Welding torch 42G-22º gas eBASIC 4mts-Panasonic-V2	1
	R98 3300 45	Welding torch 42G-45º gas eBASIC 3mts-Panasonic-V2	1
	R98 3400 45	Welding torch 42G-45º gas eBASIC 4mts-Panasonic-V2	1
B.1	M99SE03B	Guide blue L3600xØ4.6xØ1.5mm (0.8-1.0mm)-Euro	1
	M99SE04B	Guide blue L4600xØ4.6xØ1.5mm (0.8-1.0mm)-Euro	1
B.2	M99SE03K	Guide black L3600xØ5.3xØ2.2mm (1.2-1.6mm)-Euro	1
	M99SE03K	Guide blacK L4600xØ5.3xØ2.2mm (1.2-1.6mm)-Euro	1
C.1	M99SM03B	Guide blue L3600xØ4.6xØ1.5mm (0.8-1.0mm)-Miller type	1
	M99SM03B	Guide blue L4600xØ4.6xØ1.5mm (0.8-1.0mm)-Miller type	1
C.2	M99SM03K	Guide black L3600xØ5.3xØ2.2mm (1.2-1.6mm)-Miller type	1
	M99SM03K	Guide blacK L4600xØ5.3xØ2.2mm (1.2-1.6mm)-Miller type	1
D.1	M99SP03B	Guide blue L3600xØ4.6xØ1.5mm (0.8-1.0mm)-Panasonic type	1
	M99SP03B	Guide blue L4600xØ4.6xØ1.5mm (0.8-1.0mm)-Panasonic type	1
D.2	M99SP03K	Guide black L3600xØ5.3xØ2.2mm (1.2-1.6mm)-Panasonic type	1
	M99SP03K	Guide blacK L4600xØ5.3xØ2.2mm (1.2-1.6mm)-Panasonic type	1
8	R41 1023	Torch bracket eBOT 67º	1
9	R75 0020	Direct adapater disc COBOT D50x4xM6	1
10	R75 0030	Direct adapater disc eBOT D50- Long.150mm	1

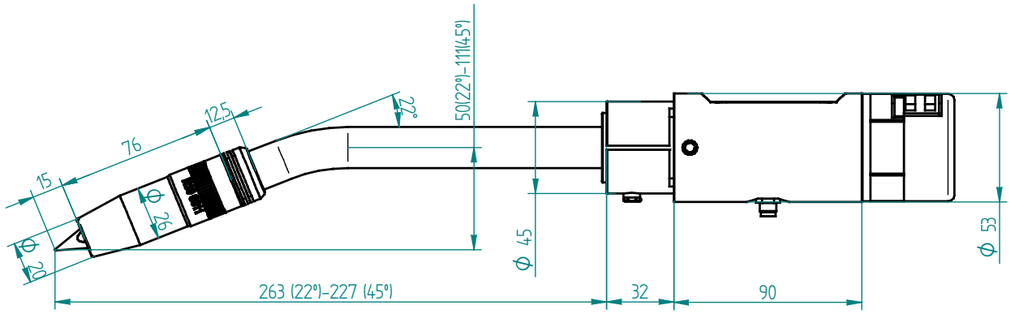

Torch neck BASIC-45G

MIG/MAG, GMAW,131,135
IEC60974-7

High power capacity

Gas

500 A - CO2 100%

400A - Mix M21 100%

Ø 0.8-1.6 mm

10-18 l/min

The capacity will be reduced by 35% whit pulsed arc.

Manufacturing characteristics.
~Low weight for COBOT
~Use in most applications
~High thermal resistance materials
~High stability of TCP
~Hard working intensity

Applications
~Non-alloy and low alloy steels
~High alloy steels.

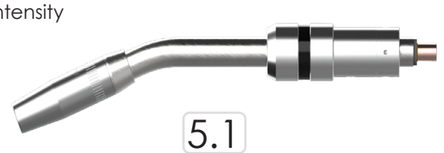

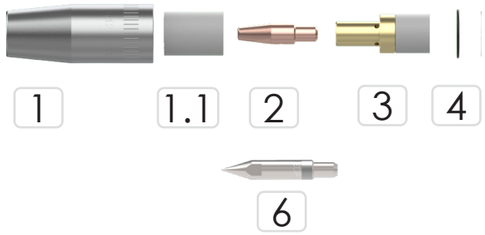

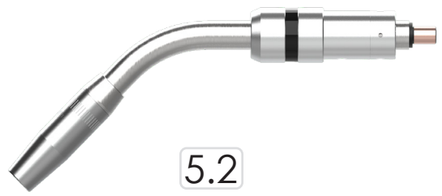

Pos.	CODE	TYPE	Min. Q.
1	R12 0411	Nozzle L79xØ16 mm	2
1.1	R10 0002	Insulator nozzle L32XØ20.75 mm	2
2	R10 0400 10	Contact tip M10 1.0 mm Cu-BICOMP	5
	R10 0400 12	Contact tip M10 1.2 mm Cu-BICOMP	5
	R10 0400 16	Contact tip M10 1.6 mm Cu-BICOMP	5
	R10 0401 08	Contact tip M10 0.8 mm CuCrZr	10
	R10 0401 10	Contact tip M10 1.0 mm CuCrZr	10
	R10 0401 12	Contact tip M10 1.2 mm CuCrZr	10
	R10 0401 16	Contact tip M10 1.6mm CuCrZr	10
3	R12 0014	Insulated diffuser M10 45G-50G	2
4	R12 0608	Oring nozzle BOT-50	10
5.1	R11 7220	Torch neck BASIC-45G 22° (X=50 mm, Z=263 mm)	1
5.2	R11 7450	Torch neck BASIC-45G 45° (X=111 mm, Z=227 mm)	1
6	R10 0115	Tip TCP M10-15mm programming	1

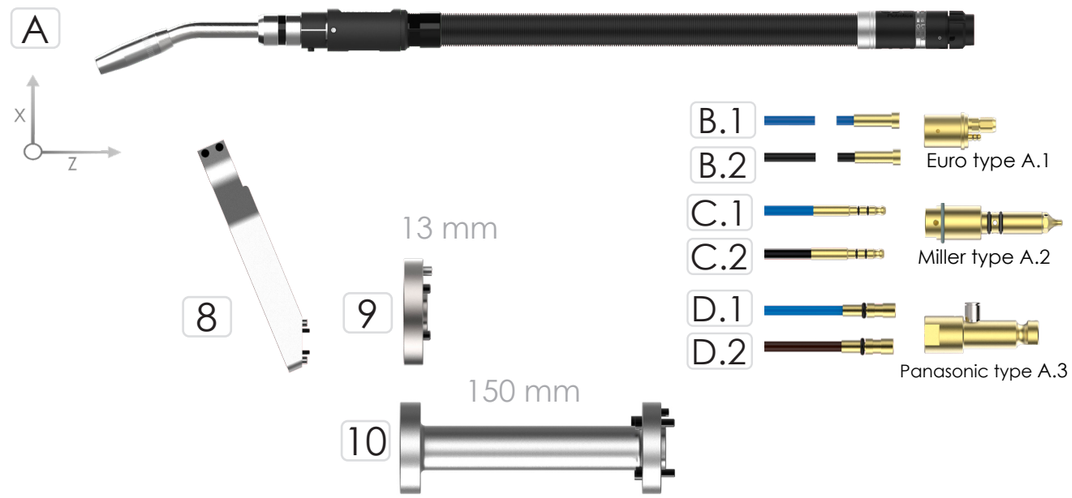

Pos.	CODE	TYPE	Min. Q.
A.1	R96 1300 22	Welding torch 45G-22° gas eBASIC 3mts-Euro type	1
	R96 1400 22	Welding torch 45G-22° gas eBASIC 4mts-Euro type	1
	R96 1300 45	Welding torch 45G-45° gas eBASIC 3mts-Euro type	1
	R96 1400 45	Welding torch 45G-45° gas eBASIC 4mts-Euro type	1
A.2	R96 2300 22	Welding torch 45G-22° gas eBASIC 3mts-Miller type	1
	R96 2400 22	Welding torch 45G-22° gas eBASIC 4mts-Miller type	1
	R96 2300 45	Welding torch 45G-45° gas eBASIC 3mts-Miller type	1
	R96 2400 45	Welding torch 45G-45° gas eBASIC 4mts-Miller type	1
A.3	R96 3300 22	Welding torch 45G-22° gas eBASIC 3mts-Panasonic type	1
	R96 3400 22	Welding torch 45G-22° gas eBASIC 4mts-Panasonic type	1
	R96 3300 45	Welding torch 45G-45° gas eBASIC 3mts-Panasonic type	1
	R96 3400 45	Welding torch 45G-45° gas eBASIC 4mts-Panasonic type	1
B.1	M99SE03B	Guide blue L3600xØ4.6xØ1.5mm (0.8-1.0mm)-Euro	1
	M99SE04B	Guide blue L4600xØ4.6xØ1.5mm (0.8-1.0mm)-Euro	1
B.2	M99SE03K	Guide black L3600xØ5.3xØ2.2mm (1.2-1.6mm)-Euro	1
	M99SE03K	Guide blacK L4600xØ5.3xØ2.2mm (1.2-1.6mm)-Euro	1
C.1	M99SM03B	Guide blue L3600xØ4.6xØ1.5mm (0.8-1.0mm)-Miller type	1
	M99SM03B	Guide blue L4600xØ4.6xØ1.5mm (0.8-1.0mm)-Miller type	1
C.2	M99SM03K	Guide black L3600xØ5.3xØ2.2mm (1.2-1.6mm)-Miller type	1
	M99SM03K	Guide blacK L4600xØ5.3xØ2.2mm (1.2-1.6mm)-Miller type	1
D.1	M99SP03B	Guide blue L3600xØ4.6xØ1.5mm (0.8-1.0mm)-Panasonic type	1
	M99SP03B	Guide blue L4600xØ4.6xØ1.5mm (0.8-1.0mm)-Panasonic type	1
D.2	M99SP03K	Guide black L3600xØ5.3xØ2.2mm (1.2-1.6mm)-Panasonic type	1
	M99SP03K	Guide blacK L4600xØ5.3xØ2.2mm (1.2-1.6mm)-Panasonic type	1
8	R41 1023	Torch bracket eBOT 67°	1
9	R75 0020	Direct adapater disc COBOT D50x4xM6	1
10	R75 0030	Direct adapater disc eBOT D50- Long.150mm	1

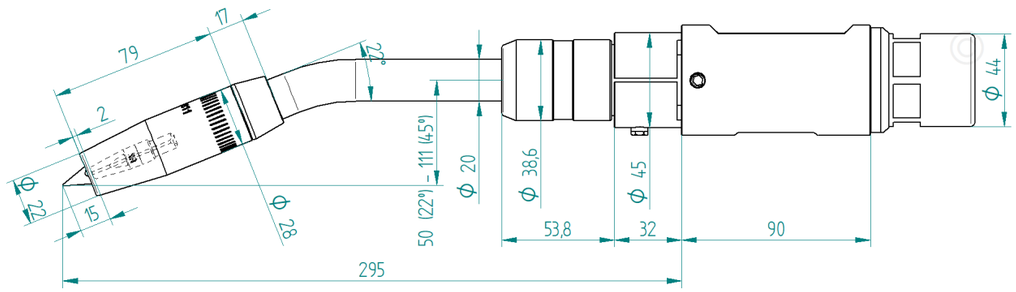

Torch neck BASIC-52W

MIG/MAG, GMAW,131,135
IEC60974-7

COLDTip High resistance materials

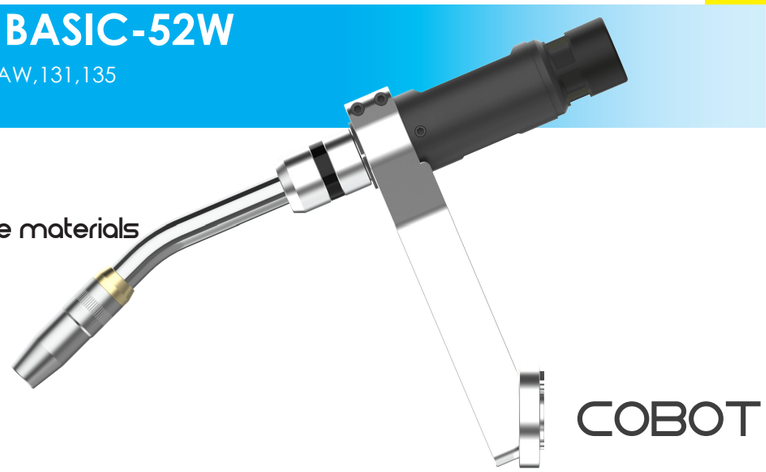

Liquid

- 500 A - CO2 100%
- 400A - Mix M21 100%
- Ø 1.0-1.6 mm
- 10-18 l/min
- The capacity will be reduced by 35% whit pulsed arc.

Manufacturing characteristics.
~Low weight for COBOT
~Use in most applications
~8-hole diffuser, better gas flow
~High thermal resistance materials
~High stability of TCP
~Medium working intensity

Applications
~Non-alloy and low alloy steels
~High alloy steels.

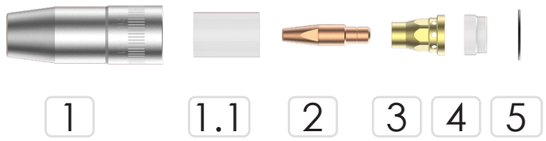

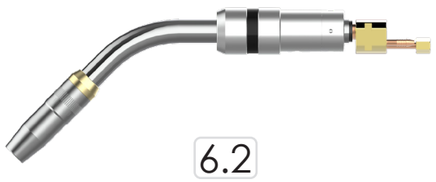

Pos.	CODE	TYPE	Min. Q.
1	R10 0011	Nozzle L76xØ15.5 mm	2
	R10 0012	Nozzle L76xØ13 mm	2
	R10 00211	Nozzle L79xØ15.5 mm	2
1.1	R10 0002	Insulator nozzle L32XØ20.75 mm	2
2	R10 0400 10	Contact tip M10 1.0 mm Cu-BICOMP	5
	R10 0400 12	Contact tip M10 1.2 mm Cu-BICOMP	5
	R10 0400 16	Contact tip M10 1.6 mm Cu-BICOMP	5
	R10 0401 08	Contact tip M10 0.8 mm CuCrZr	10
	R10 0401 10	Contact tip M10 1.0 mm CuCrZr	10
	R10 0401 12	Contact tip M10 1.2 mm CuCrZr	10
	R10 0401 16	Contact tip M10 1.6 mm CuCrZr	10
3	R12 0013	Diffuser L26xØ18.5 mm M10	2
4	R12 0308	Insulator neck L11XØ18.5 mm	2
5	R10 0401	Oring neck Ø23 mm	10
6.1	R11 5220	Torch neck BASIC-52W 22° (X=50 mm, Z=263 mm)	1
6.2	R11 5450	Torch neck BASIC-52W 45° (X=111 mm, Z=227 mm)	1
7	R10 0115	Tip TCP M10-15mm programming	1

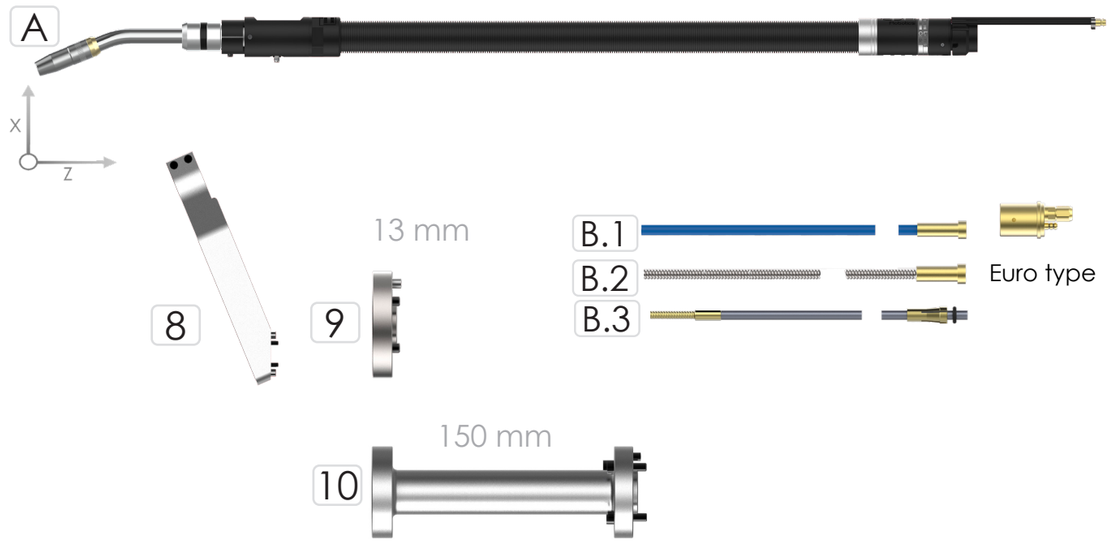

Pos.	CODE	TYPE	Min. Q.
A	R99 1300 22	Welding torch 52W-22° liquid eBASIC 3mts -Euro-V2	1
	R99 1300 45	Welding torch 52W-45° liquid eBASIC 3 mts -Euro-V2	1
	R99 1400 22	Welding torch 52W-22° liquid eBASIC 4mts -Euro-V2	1
	R99 1400 45	Welding torch 52W-45° liquid eBASIC 4 mts -Euro-V2	1
B.1	M99SE03B	Guide blue L3600xØ4.6xØ1.5mm (0.8-1.0mm)-Euro	1
	M99SE04B	Guide blue L4600xØ4.6xØ1.5mm (0.8-1.0mm)-Euro	1
B.2	M45SR03	Guide nude L3600xØ4.6xØ2.2mm (1.2-1.6mm)-Euro-HD	1
	M45SR04	Guide nude L4600xØ4.6xØ2.2mm (1.2-1.6mm)-Euro-HD	1
B.3	M99SA103	Guide for Alum L3700xØ4.5xØ2.5mm (1.2-1.6mm)-Euro	1
	M99SA104	Guide for Alum L4700xØ4.5xØ2.5mm (1.2-1.6mm)-Euro	1
8	R41 1023	Torch bracket eBOT 67°	1
9	R75 0020	Direct adapater disc COBOT D50x4xM6	1
10	R75 0030	Direct adapater disc eBOT D50- Long.150mm	1

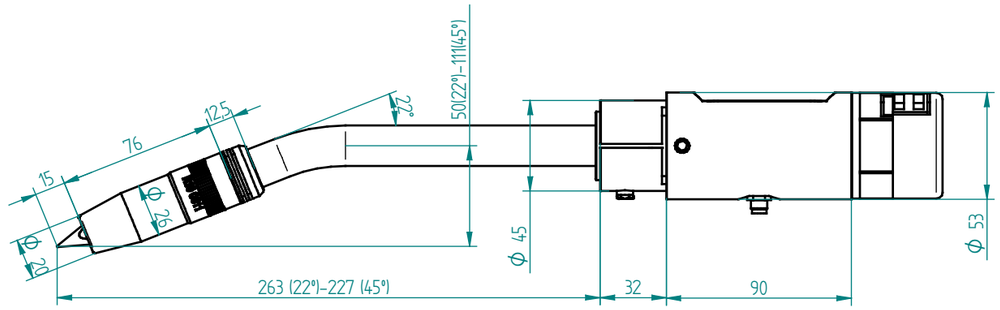

Torch neck BOT-T5W

TIG, TMAW,141
IEC60974-7

LONG LIFE COLLET

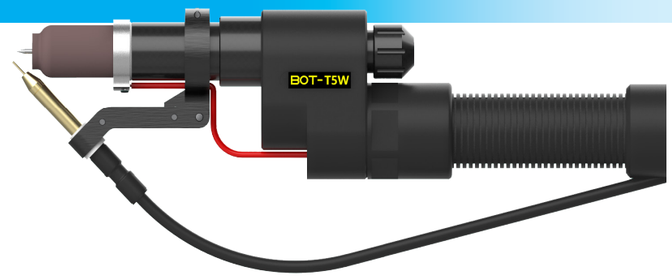

Liquid

400A - CD 100%

300A - AC 100%

Ø 1.6-4.8 mm

4-12 l/min

The capacity will be reduced by 35% whit pulsed arc.

Manufacturing characteristics.
~Tungsten holders of large dimensions and high durability
~Ring improves HF stability
~Adjustment of the position of the supply wire
~Double insulation on handle and connection disk
~Medium working intensity
~Connector for anti-collision system

Applications
~Non-alloy and low alloy steels
~High alloy steels

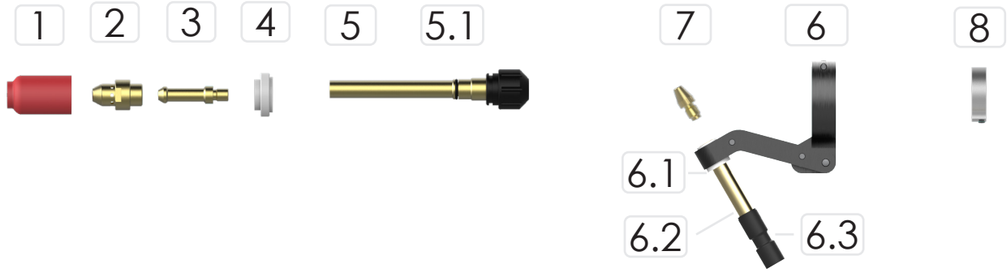

Pos.	CODE	TYPE	Min. Q.
1	T54N16	Nozzle G6	10
	T54N15	Nozzle G7	10
	T54N14	Nozzle G8	10
2	R15 5304	Diffuser M14 2.4mm	2
	R15 5305	Diffuser M14 3.2mm	2
3	R15 5524	Electrode holder 2.4 mm	2
	R15 5532	Electrode holder 3.2 mm	2
4	R15 5303	Insulator Nozzle	2
5	R15 5502	Clamping element	1
5.1	R15 0502	Oring clamping element	5
6	R15 0301	Support Wire guide TW	1
6.1	R15 0031	Wire guide insulator TW	1
6.2	R15 0021	wire guide TW	1
6.3	R15 0024	Support liner D6 TW	1
7	R15 0110	Tip Dia 1.0 mm	5
	R15 0112	Tip Dia. 1.2 mm (RECOMMENDED)	5
8	R15 0603	HF protective ring	1

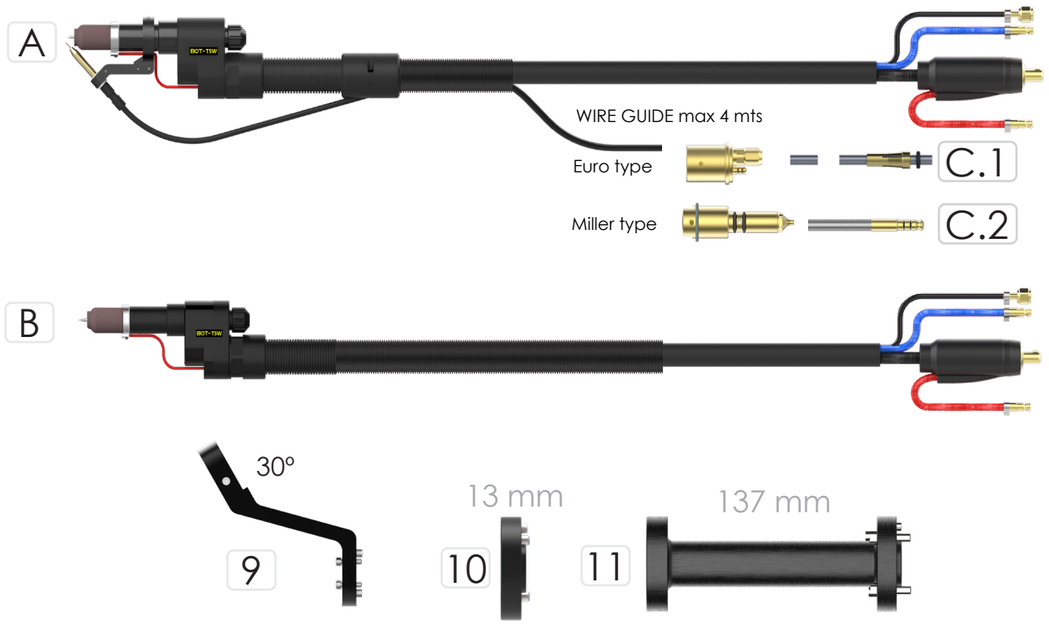

Pos.	CODE	TYPE	Min. Q.
A	R97 8xxx E	Welding torch TIG T5W - COLD WIRE Euro type	1
	R97 8xxx M	Welding torch TIG T5W -WIRE Miller type	1
B	R97 8xxx	Welding torch TIG T5W	1
C.1	M99 8002	Guide PA itBOT L2700xD4xD2mm(1.0-1.2)-Euro	1
	M99 8003	Guide PA itBOT L3700xD4xD2mm(1.0-1.2)-Euro	1
	M99 8004	Guide PA itBOT L4700xD4xD2mm(1.0-1.2)-Euro	1
C.2	M99 1502	Guide PA itBOT L2700xD4xD2mm(1.0-1.2)-Miller	1
	M99 1503	Guide PA itBOT L3700xD4xD2mm(1.0-1.2)-Miller	1
	M99 1504	Guide PA itBOT L4700xD4xD2mm(1.0-1.2)-Miller	1
9	R41 5001	Bracket TIG T5W 30º	1
10	R75 0021	Direct adapater disc insulator eBOT D50	1
11	R75 0031	Direct adapater disc TIG COBOT D50- Long.150mm	1

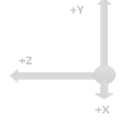

DATA	
Weight (kg)	1.320 kg
TCP mm (tool center point)	Y:50, Z:246
GC mm (gravity center)	Y:61 / Z:73

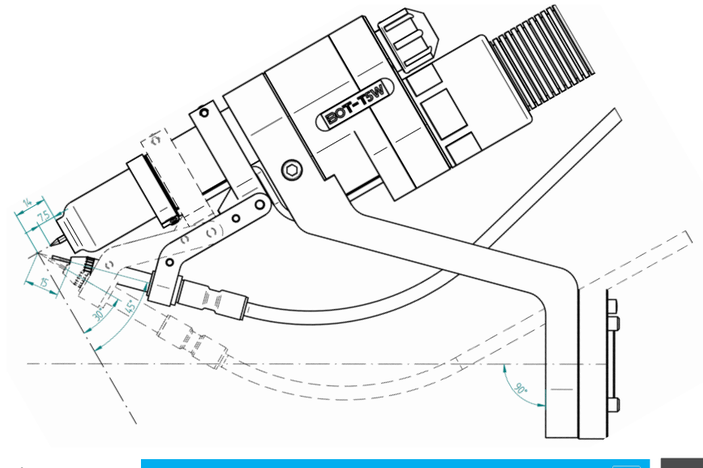

Cleaning station CS2

MIG/MAG
INDUSTRIAL ROBOTS

- 6-8 bar * / Min flow 10 l/s
- 6.3 Nm - 425 rpm
- Time cut 0.5 seg
- Max. 1.6 mm (solid wire)
- Max. 3.2 mm (tubular wire)
- 0.5 l spatter
- +5 - +50C° (*) Oil-free compressed air

Nozzle cleaning station for automated and robotized welding torches. It incorporates welding wire cutting unit. Guarantees continuity of the welding process, keeping the nozzle of the welding torch free of slag and projections

~Cleaning efficiency, short cycle time
~Total elimination of embedded projections
~Includes TCP programming verification point

Pos.	TYPE	CODE	Min. Q.
A	Clean station with wire cut (complete) + base	R02 2001	1

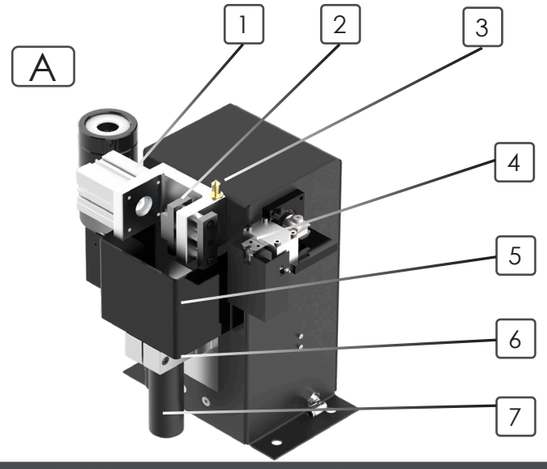

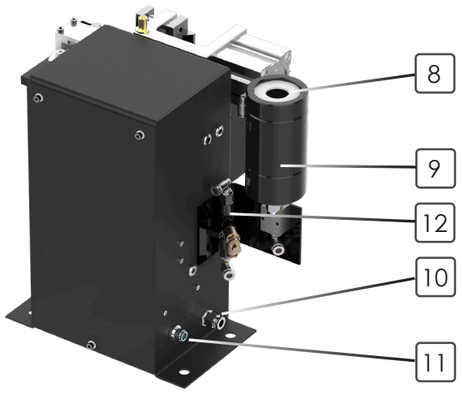

Pos.	CODE	Parts name	Functional descriptions	Min. Q.
1	R02 2P01	Clamping cylinder	Automatic clamping welding nozzle	1
2	R02 2P02	Locater block	Fixing welding gun sprayer nozzle	1
3	R02 2P03	TCP positioning pin	TCP positioning points	1
4	R02 2P04	Wire shearing device	Wiping out needless welding wire	1
5	R02 2P05	Reamer protective cover	Preventing ejection of splash	1
6	R02 2P06	Motor mounting base	Adjusting height of pneumatic motor	1
7	R02 2P07	pneumatic motor	Driving reamer for cleaning	1
8	R02 2P08	Spray protector	Protect losses of liquid spray	1
9	R02 2P09	Anti-sling Unit	Spraying anti-sling agent	1
10	R02 2P10	Air connection port	Connecting 8mm air pipe	1
11	R02 2P11	8-pin Aviation plug	Controlling interface by robot	1
12	R02 2P12	Pheumatic distributor	Liquid control anti spatter	1

Choose your reamer BOT series

BOT 30G / 42G	Nozzle L76xD13mm	Nozzle L76xD15.5mm	Nozzle L79xD15.5mm
	R03 2041	R03 2040	R03 2061
BOT 31EC / 32W	Nozzle L47xD13.5mm		
	R03 2030		
BOT 40W / 52W	Nozzle L76xD13mm	Nozzle L76xD15.5mm	Nozzle L79xD15.5mm
	R03 2041	R03 2040	R03 2042
BOT 41EC	Nozzle L76xD15.5mm		
	R03 2010		
BOT 50W	Nozzle L60xD15.5mm	Nozzle L60xD18mm	
	R03 2040	R03 2050	
BOT 60W	Nozzle L16xD15.5mm	Nozzle L16xD18mm	Nozzle L16xD21mm
	R03 2061	R03 2060	R03 2062

Reamer types for BOT - specific for the BOT series

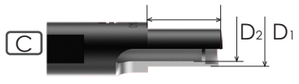

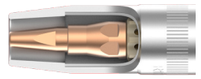

Pos.	CODE	TYPE	Min. Q.
C	R03 2030	Cleaning reamer TH L23xD13xD8.5 mm	1
	R03 2010	Cleaning reamer EC TH L38.5xD15xD10.5 mm	1
	R03 2040	Cleaning reamer TH L26xD15xD10.5 mm	1
	R03 2041	Cleaning reamer TH L22xD12.5xD10.5 mm	1
	R03 2050	Cleaning reamer TH L26xD17.5xD10.5 mm	1
	R03 2060	Cleaning reamer TH L29xD17.5xD10.5 mm	bp

Standard reamer types

Code.	Nozzle inside	Contact tip mm	D1 mm	D2 mm	Min. Q.
R03 1107-40	12	6	11	7	bp
R03 1207-40	13	6	12	7	bp
R03 1209-40	13	8	12	9	bp
R03 1309-40	14	8	13	9	bp
R03 1409-40	15	8	14	9	bp
R03 1509-40	16	8	15	9	bp
R03 1210-40	13	9	12	10	bp
R03 1310-40	14	9	13	10	bp
R03 1410-40	15	9	14	10	bp
R03 1510-40	16	9	15	10	bp
R03 1411-40	15	10	14	11	bp
R03 1511-40	16	10	15	11	bp
R03 1611-40	17	10	16	11	bp
R03 1711-40	18	10	17	11	bp
R03 1713-40	18	12	17	13	bp

bp: product out of stock, manufacture on demand

CONTROL DISC FOR UR CD-2S

COBOTS

Product in collaboration with SynerBot®

Free-drive control and waypoint recording.

440 gr - L42.5 x Ø94 mm

COMPATIBLE ROBOTS

Universal Robots UR3, UR5, UR10, UR3e, UR5e, UR10e

COMPATIBLE CONTROLLERS (others consult)

Universal Robots CB3.0, CB3.1, e-Series

COMPATIBLE SOFTWARE (others consult)

SW 3.6.1, SW 3.8.0, SW 5.0.3

2.1

1

Pos.	CODE	TYPE	Min. Q.
1	R78 000C	CONTROL DISC CD-2S (includes code R7 3005 02)	1
2.1	R7 3005 02	DISC SCREW M6x50 mm DIN7991(For standard disc)	1
	R7 3005 03	DISC SCREW M6x50 mm DIN912 (For long adapter disc, code R75 0030)	1

Description:

Control disc for the wrist of UR collaborative robot. Two illuminated push-buttons allow free-drive control and waypoint recording in an easy and comfortable way.

These push-buttons can also be used as inputs for the user program.

It includes URCap to be installed in the robot controller.

Usage:

As accessory for Universal Robots collaborative robots.

Main advantages:

- Ergonomic. Designed for a comfortable use in the robot wrist.
- Light and strong. Machined aluminium body.
- Stylish design. Black anodized surface finished.
- Easy installation with four through-bolts. (Not included.)
- Two multi-function push-buttons with LED light.
- Easy to press buttons: Can be used with globes.

Functions with program stopped.

- Free-drive control. To adjust robot's pose with one hand.
- Waypoint recording. To add waypoints to the program.
- LEDs. Each button lights when its function is available.

Functions with program running.

- Programmable buttons. Continuation after pause, script launching, conditional programming, etc.
- Programmable LEDs. Script to configure mode and blink.

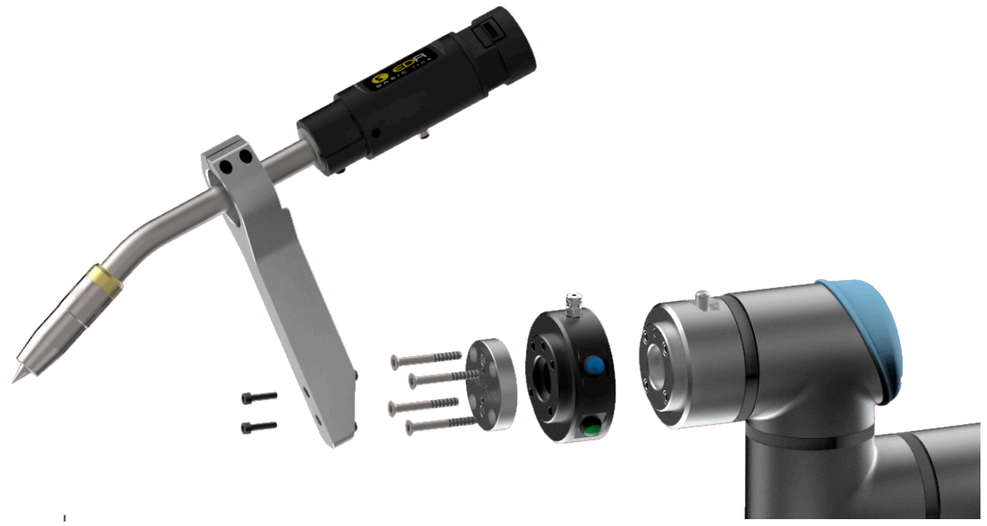

FRONT

SIDE

READ

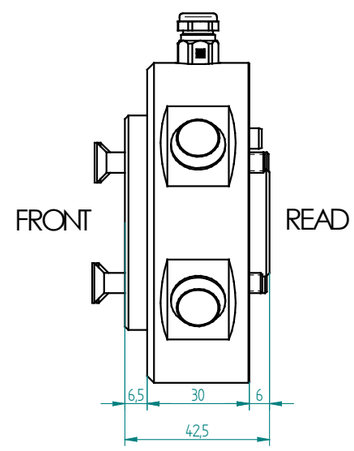

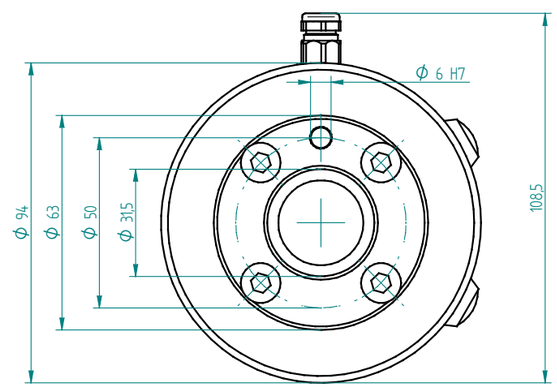

COVER ROBOT FOR UR

COBOTS

Product in collaboration with SynerBot®

Fire protection cover for Universal Robots collaborative robots

Pos.	CODE	TYPE COBOT	Min. Q.
1	R06 1016	UR 5 CB Series	1
	R06 1013	UR 5 e-Series	1
	R06 1001	UR 10 CB Series	1
	R06 1012	UR 10 e-Series	1

Description:
Protective cover for collaborative robots of the Universal Robots brand. Protection against typical incandescent welding splashes or environments where emery saw is being used. Protection against thermal radiation and UVA radiation ..

Use:
Industrial use in UR collaborative robots used in welding or in environments where hostile temperature conditions or process sparks exist

Main Advantages:
- Very low weight.
- Dimensions fully adjusted to the robot.
- Easy placement thanks to its velcro closures.
- Polyester inner lining. Anti-wear to friction.
- UV resistant.
- Resistant to high temperatures, 550ºC in intermittent and 150ºC in continuous.
- Resistant to welding splashes and flying sparks.

Flame retardant protection case consisting of 6 totally independent parts with each other.
Made with Fortaglas® Aluminized, (*) fabric made of fiberglass filaments and textured, with a very thin sheet of aluminum. 100% polyester inner lining.

(*) Basic woven properties of Robot Case (TVL 119)
Fortaglas® Aluminizado are fabrics made of fiberglass and textured filaments, with a very thin sheet of aluminum incorporated on 1 side. For protection applications against radiant heat.

Fortaglas® meets the requirements of the most stringent English, European and international standards for flammability applications: BS476 part 7: 1987 Class 1 and BS476 part 6: 1989 Class 0

Weight	gr/m²	300 ±10%
Thickness	mm	0.2 ±0.1
Fiberglass diam.	micra/micron	6-9
Weave		satin
Ends-picks 10cm- * Urdimbre / warp		170
**** Weft***		125
Strength warp	N/50mm	1300
Strength weft	N/50mm	1800
Service temperature		
**** Short periods ºC***	ºC	550
**** Continuous***	ºC	150

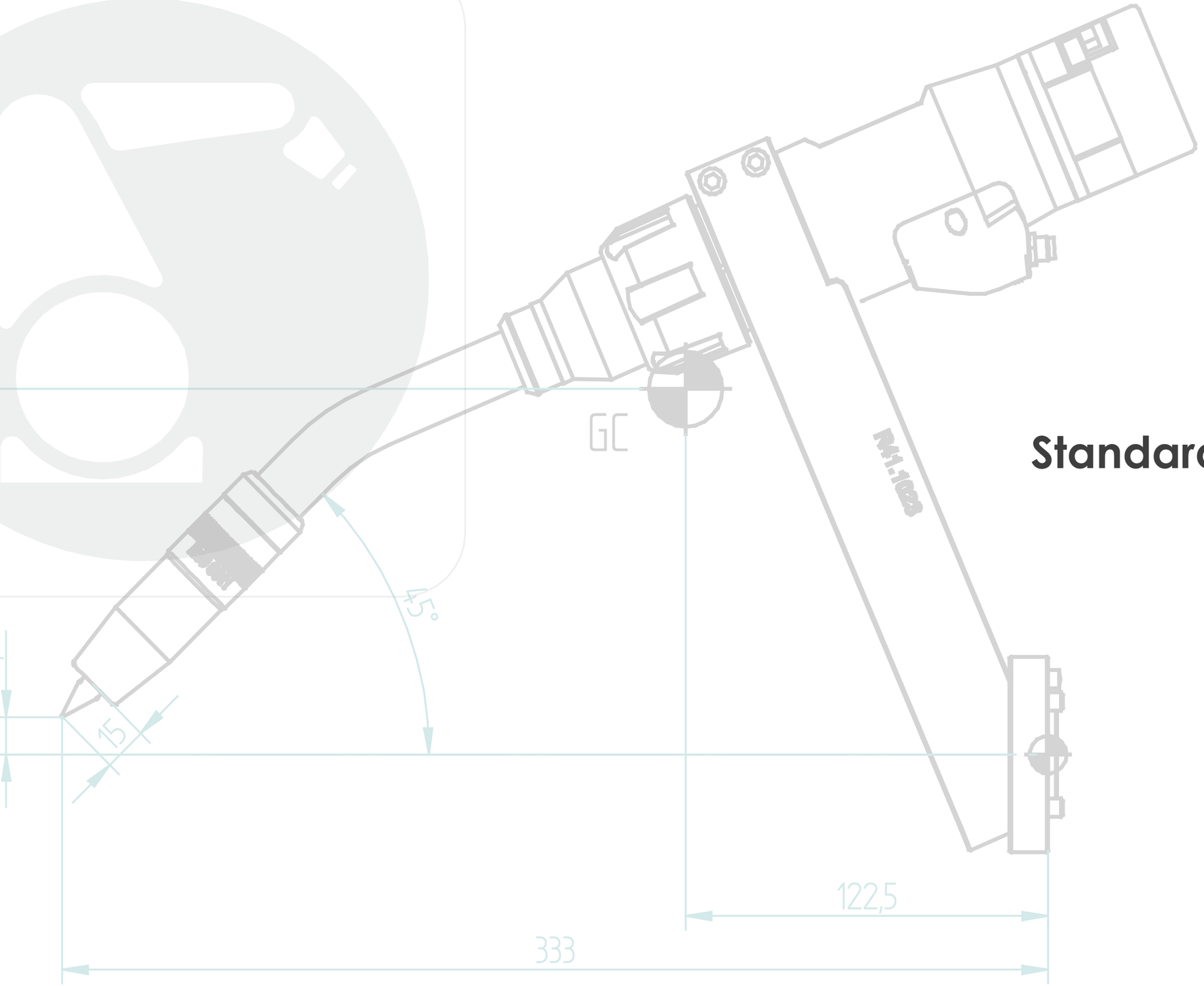

Standard configuration data

COBOT 40W

CE

MIG/MAG, GMAW, 131,135

Tehcnical data according to IEC60974-7

Liquid

500 A - CO2 100%

400 A - Mix M21 (ISO 14175) 100%

The capacity will be reduced by 35% whit pulsed arc.

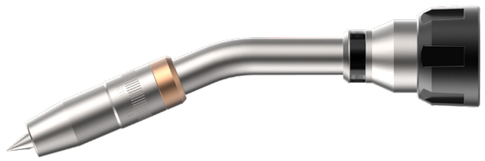

BOT1W

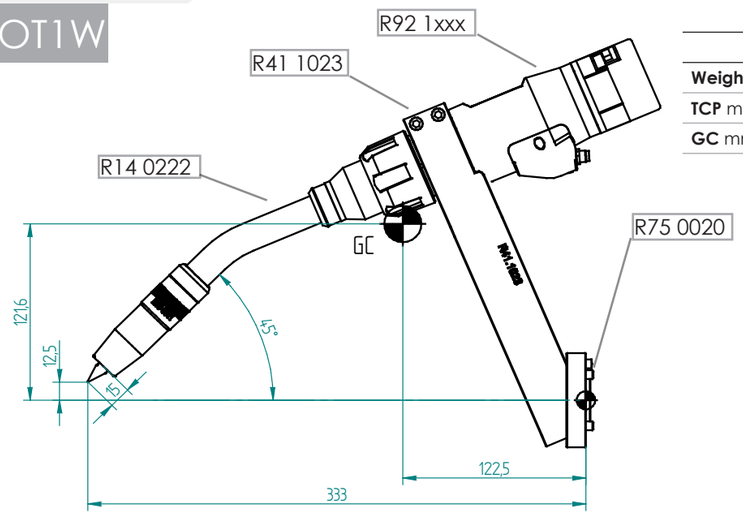

DATA	
Weight (kg)	2.10
TCP mm (tool center point)	Y:12.5, Z:333
GC mm (gravity center)	Y:121.6 / Z:122.5

BOT2W

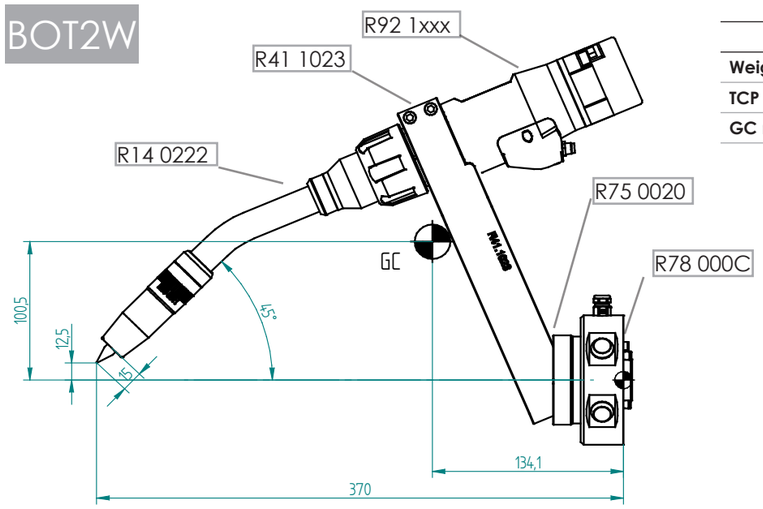

DATA	
Weight (kg)	2.54
TCP mm (tool center point)	Y:12.5, Z:520
GC mm (gravity center)	Y:100.5 / Z:134.1

BOT3W

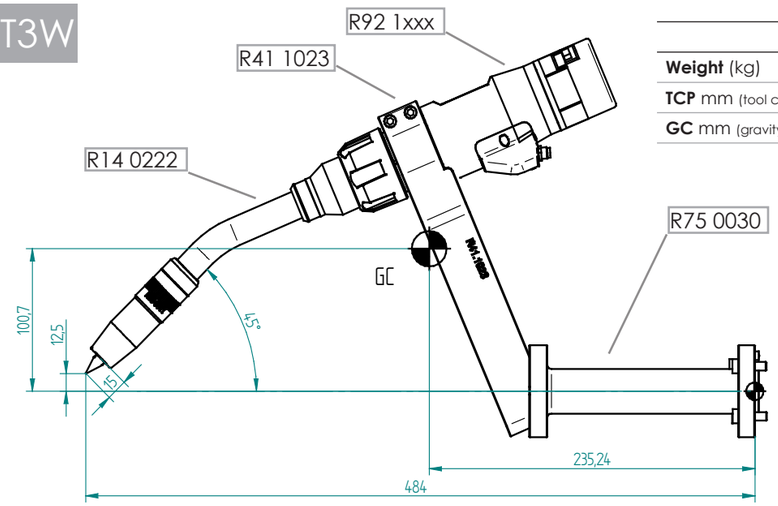

DATA	
Weight (kg)	2.54
TCP mm (tool center point)	Y:12.5, Z:484
GC mm (gravity center)	Y:100.7 / Z:235.24

BOT4W

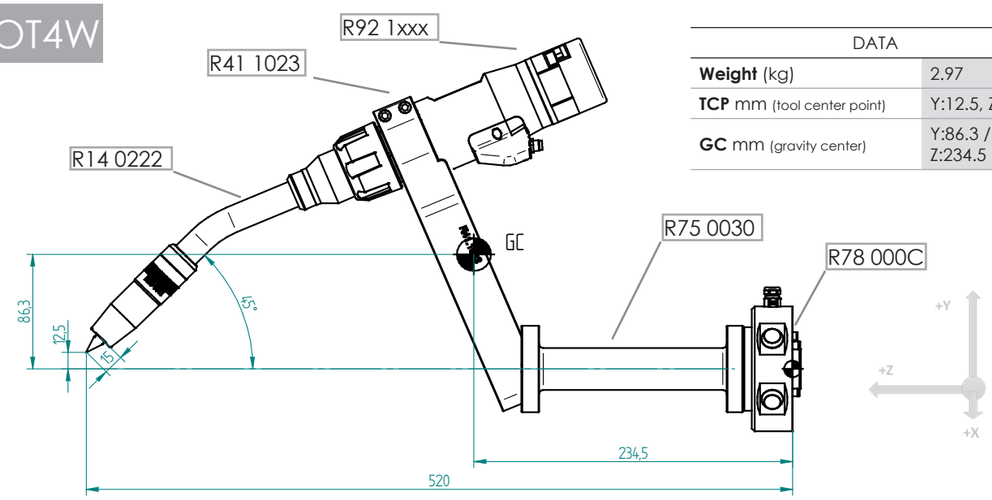

DATA	
Weight (kg)	2.97
TCP mm (tool center point)	Y:12.5, Z:520
GC mm (gravity center)	Y:86.3 / Z:234.5

BOT5W

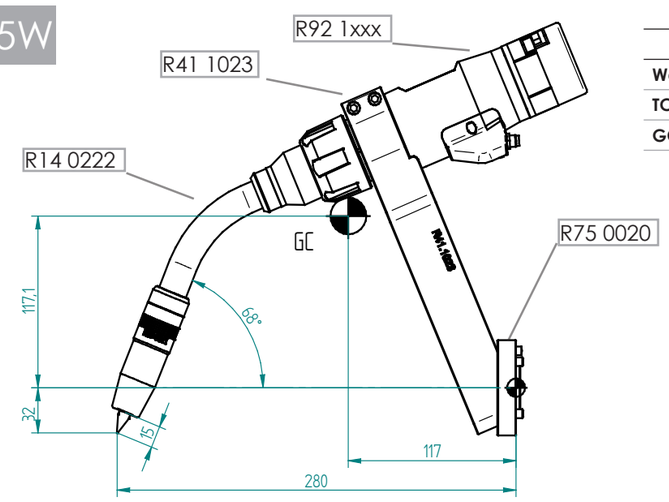

DATA	
Weight (kg)	2.10
TCP mm (tool center point)	Y:-32 / Z:280
GC mm (gravity center)	Y:117.1 / Z:117

BASIC 52W

CE

Welding process:

MIG/MAG, GMAW, 131,135

Tehcnical data according to IEC60974-7

Liquid

500 A - CO2 100%

400 A - Mix M21 (ISO 14175) 100%

The capacity will be reduced by 35% whit pulsed arc.

BAT5W

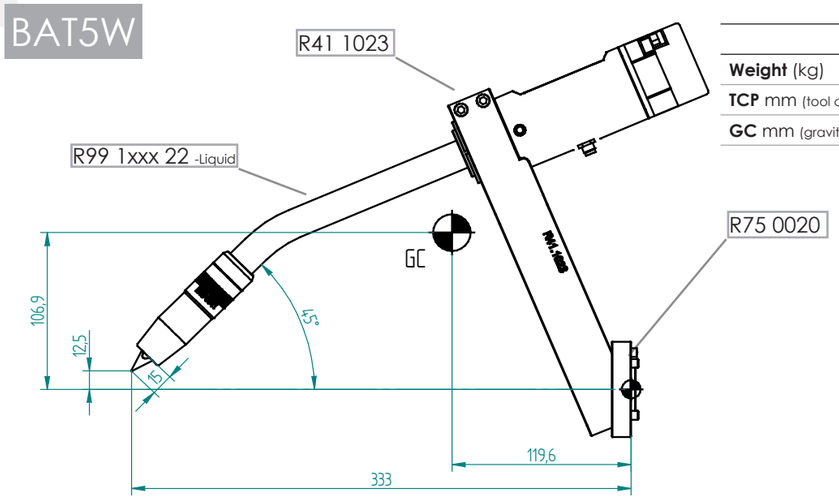

DATA	
Weight (kg)	1.44
TCP mm (tool center point)	Y:12.5 / Z:333
GC mm (gravity center)	Y:106.9 / Z:119.6

BAT6W

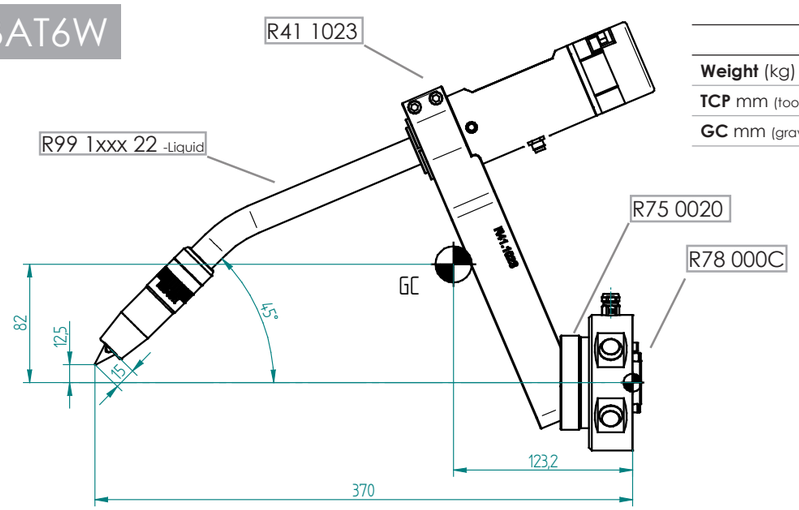

DATA	
Weight (kg)	1.89
TCP mm (tool center point)	Y:12.5 / Z:370
GC mm (gravity center)	Y:82 / Z:123.2

BAT7W

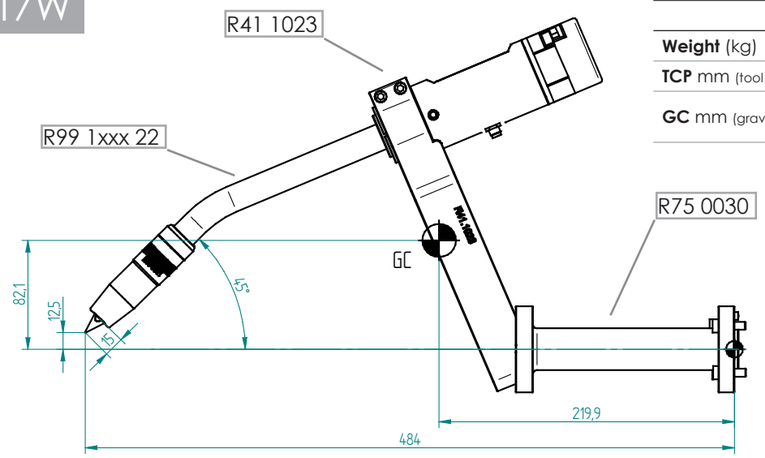

DATA	
Weight (kg)	1.88
TCP mm (tool center point)	Y:12.5, Z:484
GC mm (gravity center)	Y:82.1 / Z:219.9

BAT8W

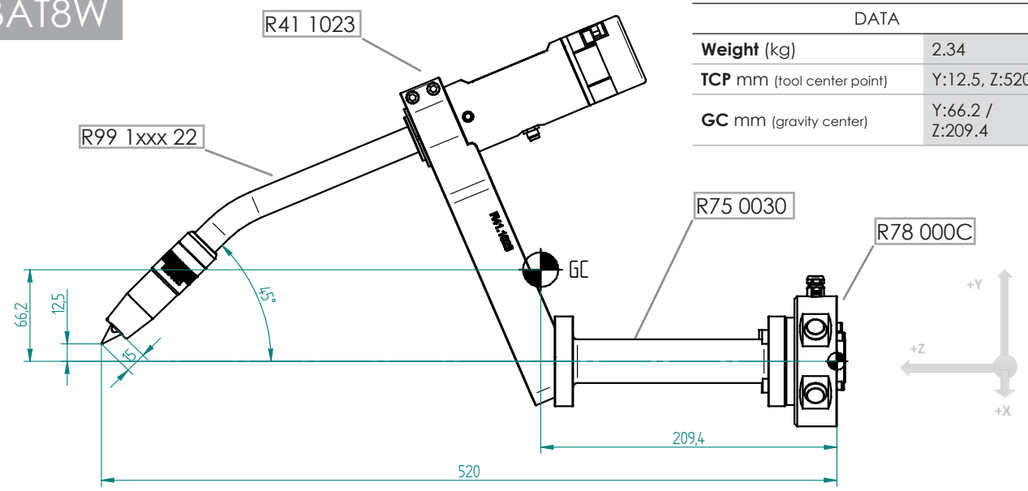

DATA	
Weight (kg)	2.34
TCP mm (tool center point)	Y:12.5, Z:520
GC mm (gravity center)	Y:66.2 / Z:209.4

BAT9W

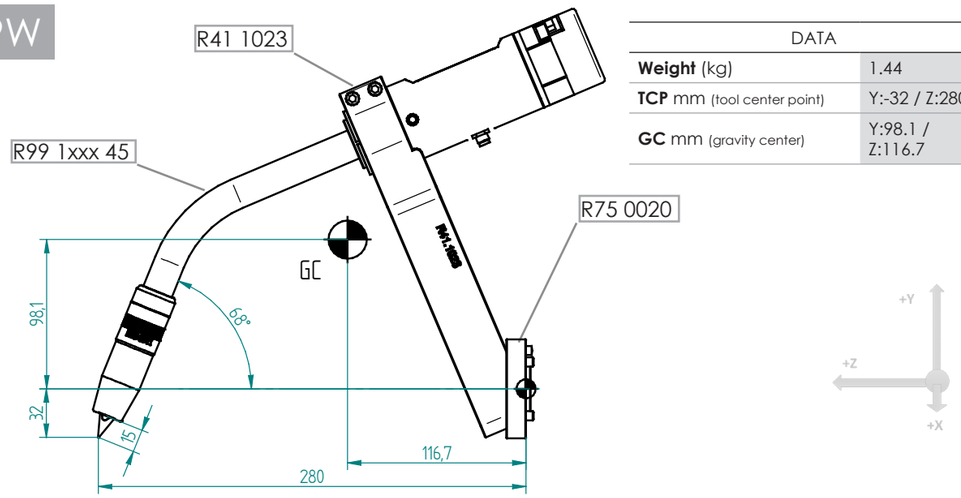

DATA	
Weight (kg)	1.44
TCP mm (tool center point)	Y:-32 / Z:280
GC mm (gravity center)	Y:98.1 / Z:116.7

Notes:

Welding torches collaborative robots

EDRtorches, S.L.
www.edrtorches.com
info@edrtorches.com

Co-funded by the European Union
MINISTERIO DE HACIENDA
Fondos Europeos

en2027CAT_COBOT_EDR

© 2027 EDRtorches, S.L. All rights reserved. Subject to change without notice. Excerpts and reprints not permitted